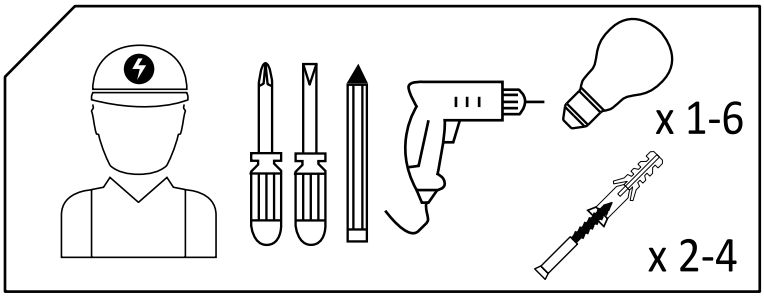
x 1-6
x 2-4

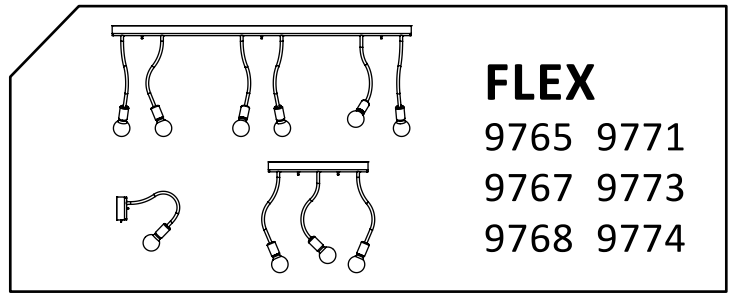
FLEX
9765 9771
9767 9773
9768 9774

1

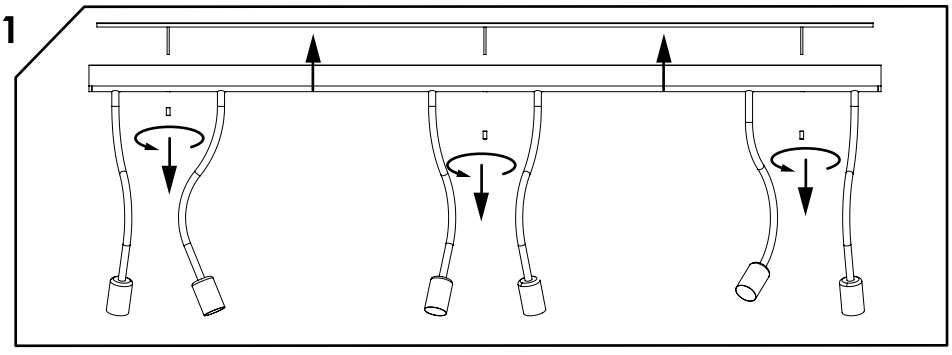

2

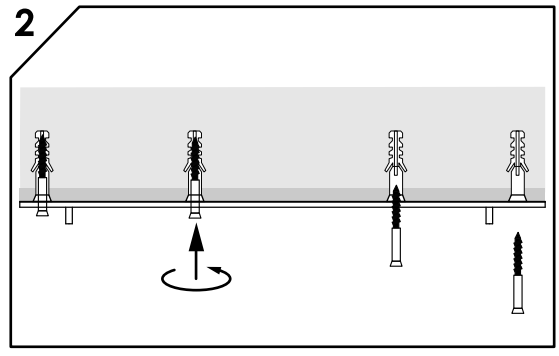

3

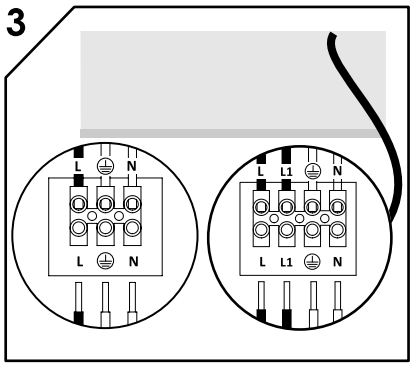
L
N
L
N
L
L1
N
L
L1
N

4

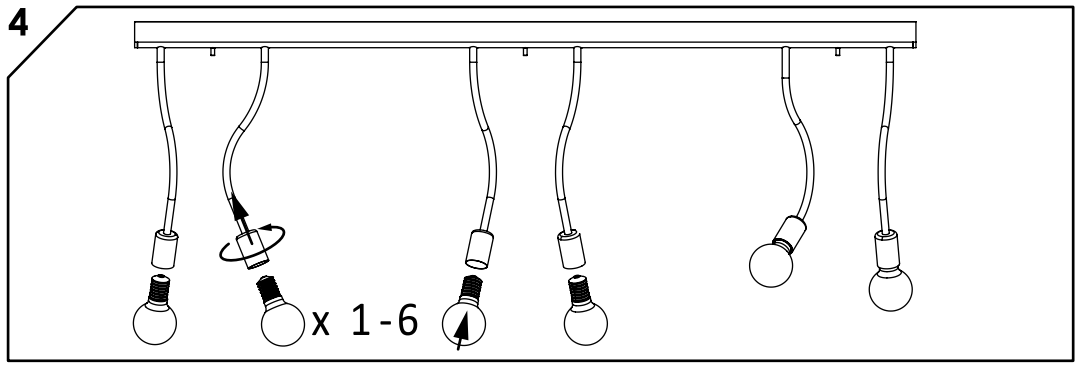
x 1-6

5

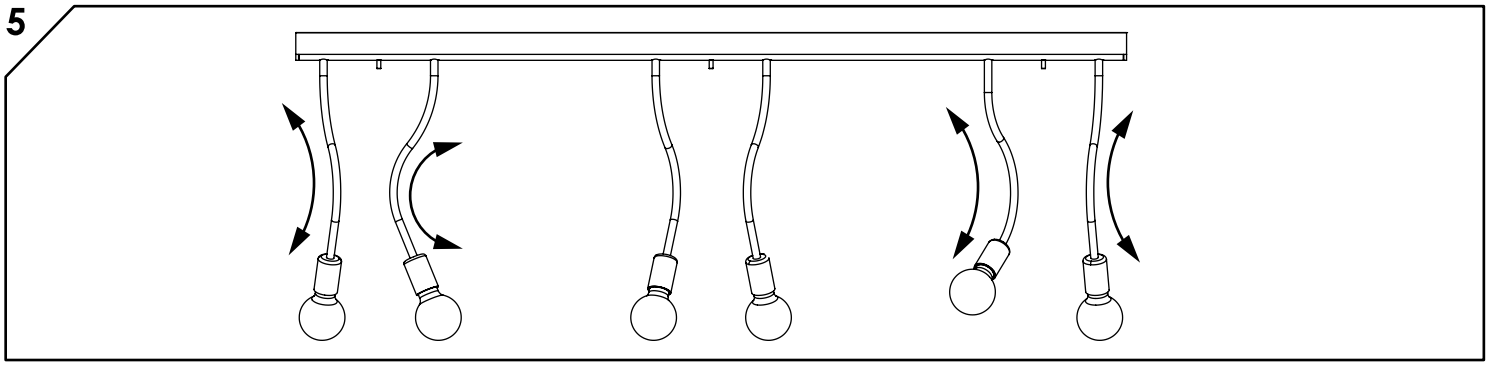

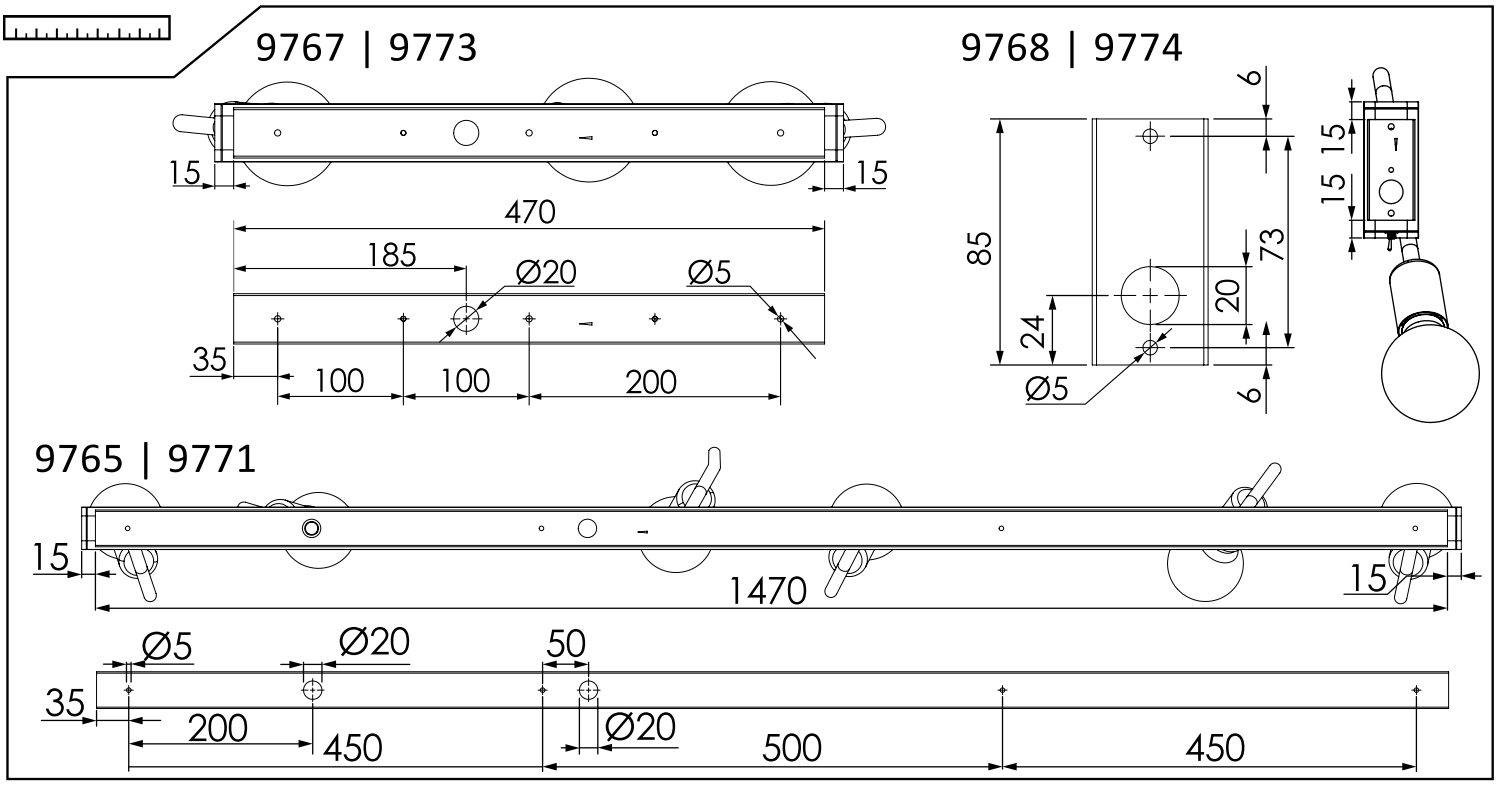
9767 | 9773
15
15
470
185
Ø20
Ø5
35
100
100
200
9768 | 9774
6
85
73
20
24
Ø5
6
15
15
9765 | 9771
15
1470
15
Ø5
Ø20
50
35
200
450
Ø20
500
450