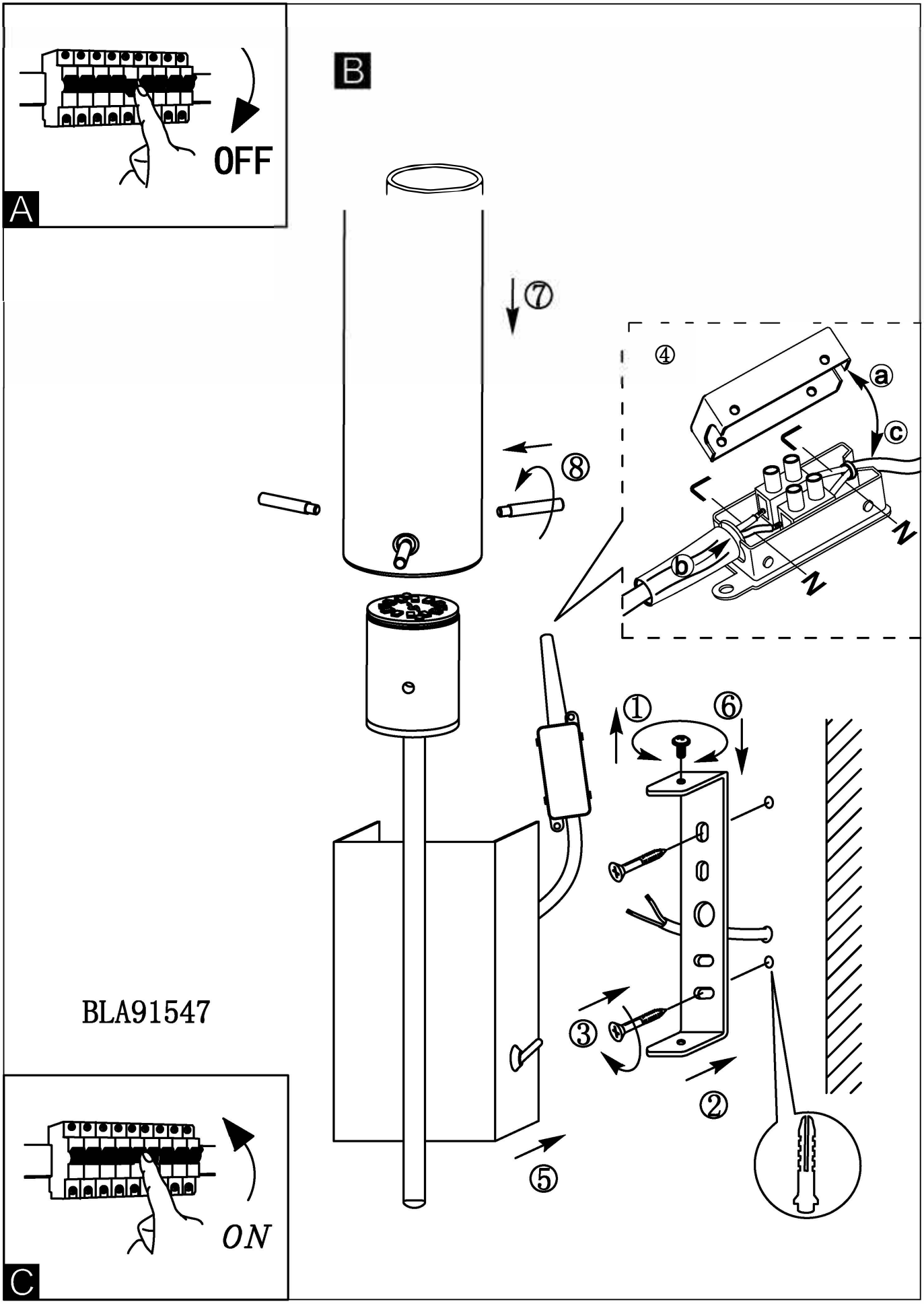
A
OFF
B
⑦
⑧
④
ⓐ
ⓒ
ⓑ
L
N
①
⑥
③
②
⑤
BLA91547
C
ON